Features

- For use in active filters and snubbers for electronic circuit.
- Featured metallized polypropylene films to increase electric current withstand capability.
- 50% better dielectric withstand than the HCP series and 3~5 times better than the HCE series.
- The resin case is designed to comsume a smaller footprint due to the reduced length and width.
- The case top features a raduis which allows for ventilated effects.

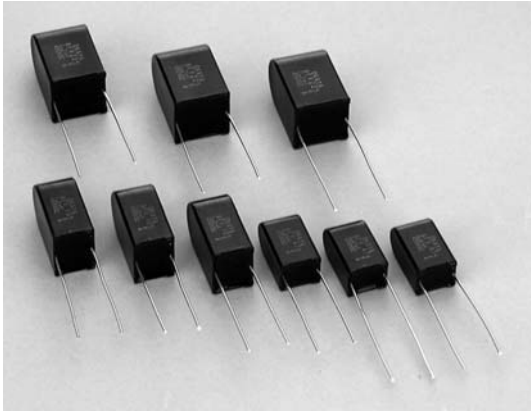

Applications

- TV monitor, CRT monitor, Electric Appliances (75~500W) and All electric equipment using switching power supplies or semiconductors requiring snubber circuit.

Current withstand comparison vs. HCP

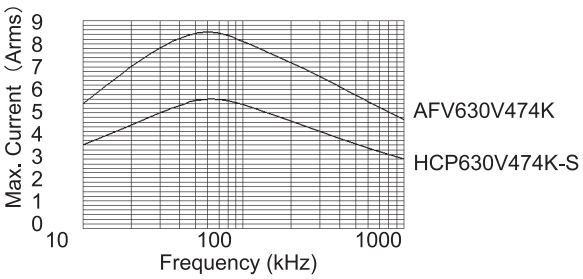

Current withstand comparison vs. HCE

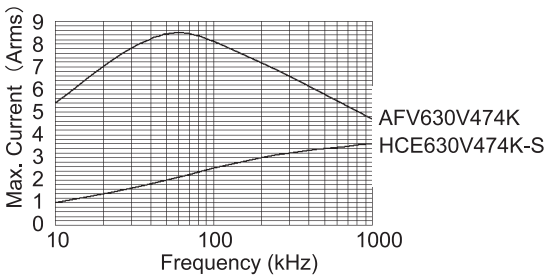

Electrical Specifications

Rated Voltage / Capacitance		450V					630V					Dissipation factor	Test voltage	Insulation resistance
PART NO.	μF	W	T	H	F	d	W	T	H	F	d			
474	0.47	12.0	10.5	21.0	10.0	0.8	12.0	16.0	26.5	10.0	1.0	0.001max (at 1000±100Hz)	Rated voltage ×1.75 (2~5sec)	2000ΩF min. (at 20℃ 100VDC)
105	1.0	12.0	16.0	26.5	10.0	1.0	17.0	17.0	27.5	15.0	1.0			
225	2.2	17.0	17.0	27.5	15.0	1.0	20.0	26.0	36.0	17.5	1.0			

Operating Temperature: -40 ~ +85℃

- Model Numbering System

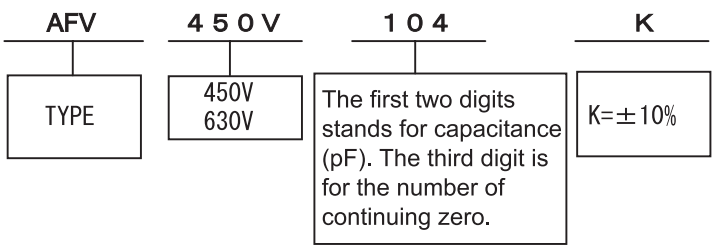
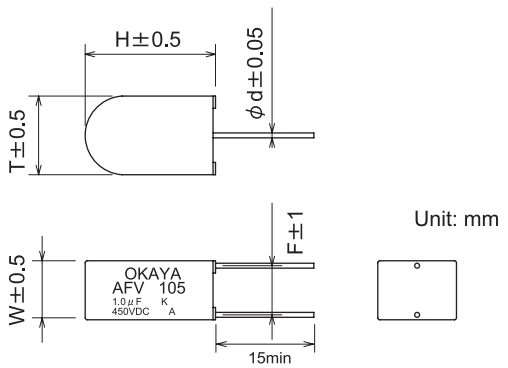
Dimensions