EEMB BATTERY

LIR14500 Lithium Ion Battery

Brief Datasheet

1 Dimension

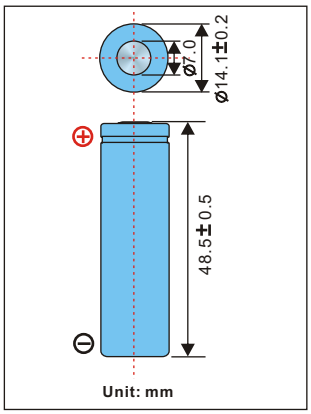

2 Basic Specification

Nominal Voltage		3.7V
Nominal Capacity	Typical	650mAh (0.2C discharge)
	Minimum	650mAh (0.2C discharge)
Charge method		CC/CV (Constant Current-Constant Voltage) current:0.5C Voltage:4.2V End current: 13mA
Charging Voltage		4.20V±0.05V
Charging Std. Current		325mA
Max Current	Charge	650mA
	Discharge	1300mA
Ambient Temperature	Std.Charge	-20°C to 45°C
	Discharge	-20°C to 60°C
	Storage	-5°C to 35°C
Discharge cut-off voltage		2.75V
Internal Impedance		<80m Ω
Cycle life		>300cycles(≥80% capacity)
Nominal Weight		Approx.20g

Note:*1C = 1 Capacity

3 Electrical Characteristics

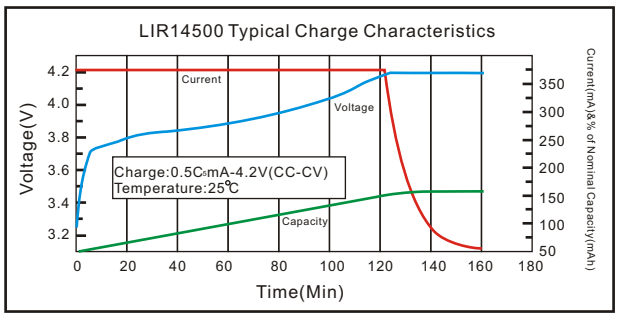

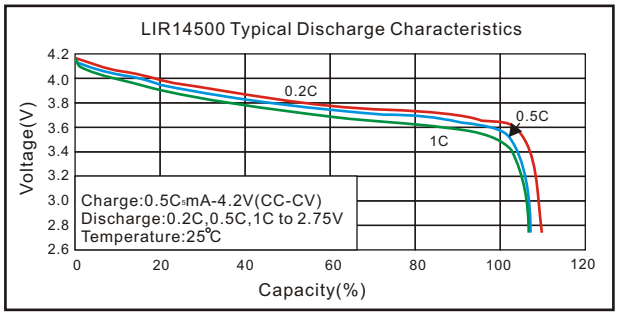

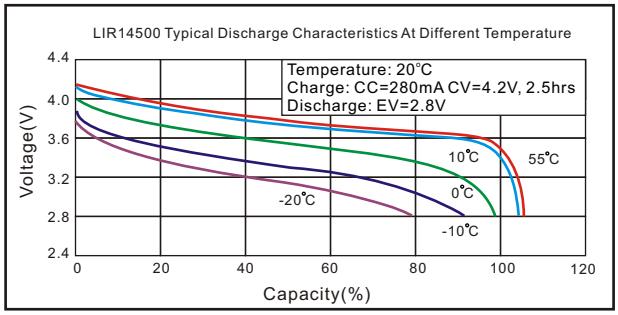

Li-ion

Note: Any representations in this brochure concerning performance, are for informational purposes only and are not construed as warranties either expressed or implied, of future performance.