RP-S310SWG PROBE

PART NUMBERDESCRIPTION

R P S 3 1 0 S W G □

- **SERIES**: RP SERIES
- **TYPE**: S Single, D Dual
- **OPTION**: MM126310
- **TIP STYLE**: SWJ, LSC, MHF4, SWG
- **MODIFIED**

MATERIAL AND FINISH

	MATERIAL	FINISH
CENTER CONTACT	BERYLLIUM COPPER/BRASS	10μ"/30μ" GOLD
INSULATOR	PTFE	WHITE
OUTER CONTACT	BERYLLIUM COPPER	10μ" GOLD
	BRASS	10μ" GOLD
	STAINLESS STEEL	PASSIVATED
SPRING	SWP	3μ" GOLD
	SW80C	3μ" GOLD

ELECTRICAL CHARACTERISTICS

	TESTING CONDITION	SPECIFICATIONS
IMPEDANCE	0 ~ 6 GHz	50 Ω
VSWR	DC to 3 GHz	1.3 max
	3 to 6 GHz	1.5 max
DIELECTRIC WITHSTANDING VOLTAGE	DC, time: 60 s	300 Vrms min
CENTER CONTACT RESISTANCE	DC 0.2 V, 1A	20 mΩ
OUTER CONTACT RESISTANCE	DC 0.2 V, 1A	10 mΩ
INSULATING RESISTANCE	DC 500 V, time: 60 s	500 MΩ

MECHANICAL CHARACTERISTICS

	TESTING CONDITION	SPECIFICATIONS
FORCE TO ENGAGE	N/A	2 in-lbs max. (SMA)
FORCE TO DISENGAGE	N/A	2 in-lbs max. (SMA)

Rapidtek Magnetic Devices Inc.
http://www.rapidtek.net
Tel : 02 - 8698 - 1068
Fax : 02 - 8698 - 1018
17F, No.75, Sec. 1, Xintai 5th Rd., Xizhi Dist., New Taipei City 22101, Taiwan

RP-S310SWG PROBE

STANDARD DIMENSIONS

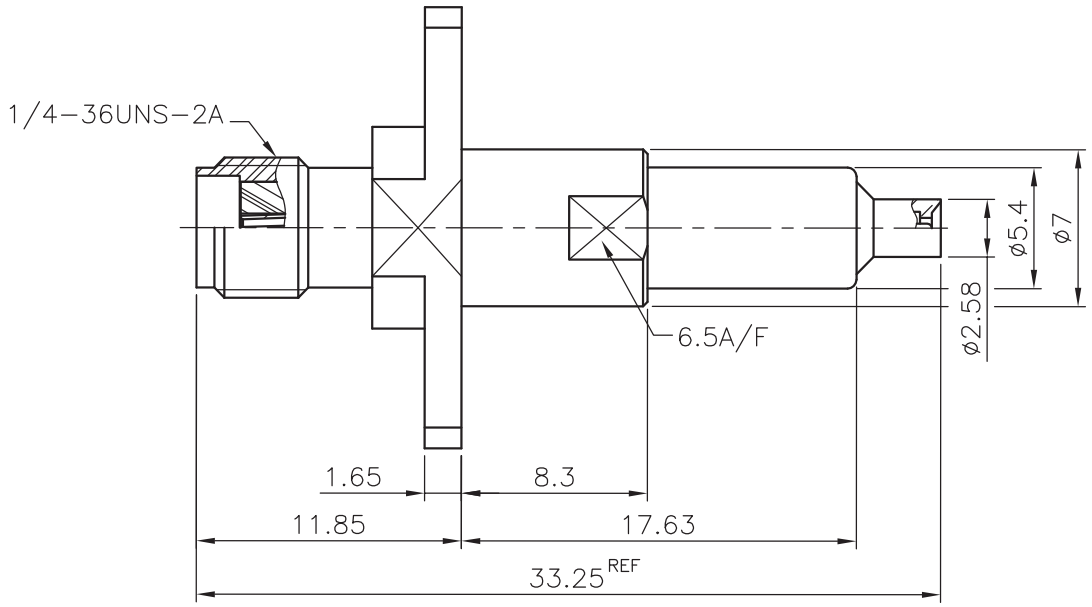

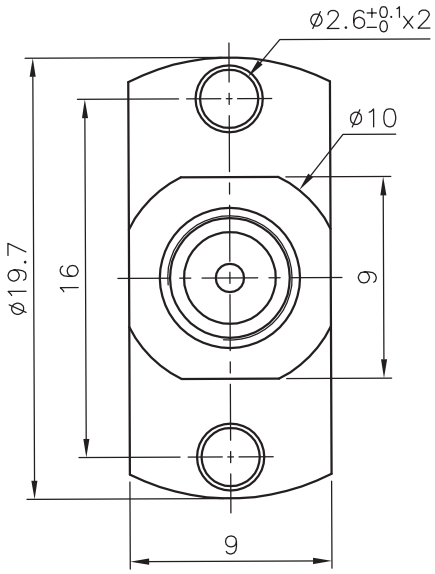

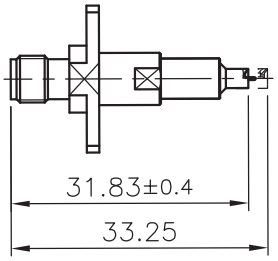

Rapidtek Magnetic Devices Inc.
http://www.rapidtek.net
Tel : 02 - 8698 - 1068
Fax : 02 - 8698 - 1018
17F, No.75, Sec. 1, Xintai 5th Rd., Xizhi Dist., New Taipei City 22101, Taiwan

RP-S310SWG PROBE

VNA TESTING

Rapidtek Magnetic Devices Inc.
http://www.rapidtek.net
Tel : 02 - 8698 - 1068
Fax : 02 - 8698 - 1018
17F, No.75, Sec. 1, Xintai 5th Rd., Xizhi Dist., New Taipei City 22101, Taiwan