LED Driver

High Power Constant Current LED Driver LD1007 Series	
Total Power	8.4 Watts max.
Input Voltages	10.5 – 30VDC
Number of Outputs	One

Product Specifications

ANZ#: Z140, September 29, 2006

Features :

DC Output with Constant Current,
Outdoor or Indoor use
Rain-proof Design - IP66,NEMA3
For Dry and Damp locations
Convection Cooled in plastic housing
Load share with parallel operation (Constant Current)
Meet FCC and CE
Three Years Warranty

Applications :

LED Signage
LED Architectural Lighting
LED Industrial Lighting
LED Channel Letter
LED General Luminaire

CE FC IP66

Specifications :

Input Range : 10.5 ~ 30 VDC / 1A	MTBF(@25°C) : >100,000 Hours,MIL-217F
Efficiency : 85% Typical	EMC Compliance: Meet FCC , CE standards
Protection : OPP,SCP - Auto Recovery	Dimension : 46(L),34(W),19(H) mm +/- 0.5mm
Operation Temp. : -30°C ~ +50°C, Tc : 70°C	Weight : 65 Grams Typical
Storage Temp. : -40°C ~ +85°C	

Model Listing :

Model	DC Output Constant Voltage	Output Current Max.	Watts Max.	Model	DC Output (Vf) Working Voltage	DC Output Constant Current	Watts Max.
LD1007-24	24V ± 5%	350mA	8.4W	LD1007-24-C0350	2~ 24V	350mA ± 5%	8.4W
LD1007-12	12V ± 5%	700mA	8.4W	LD1007-12-C0700	2~12V	700mA ± 5%	8.4W
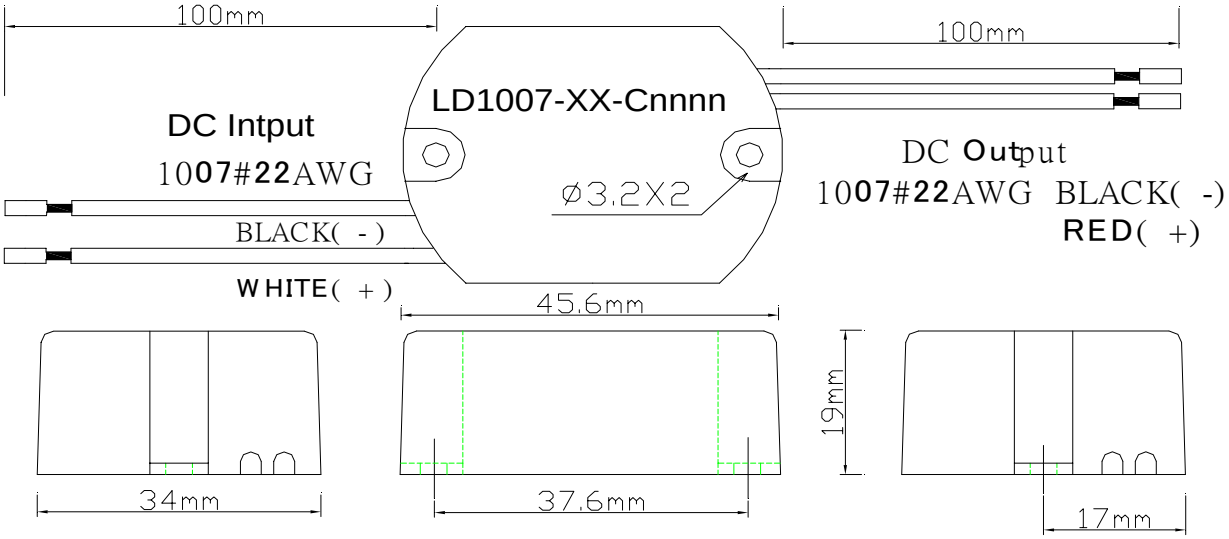
Mechanical Drawing :