THE REVISION STATUS OF ALL SHEETS OF THIS DRAWING IS THE SAME AS SHEET 1

LTR	DESCRIPTION	DATE	BY
-	Released	1/22/97	JCL
A	Redrawn; New Sketch	4/8/03	JCL

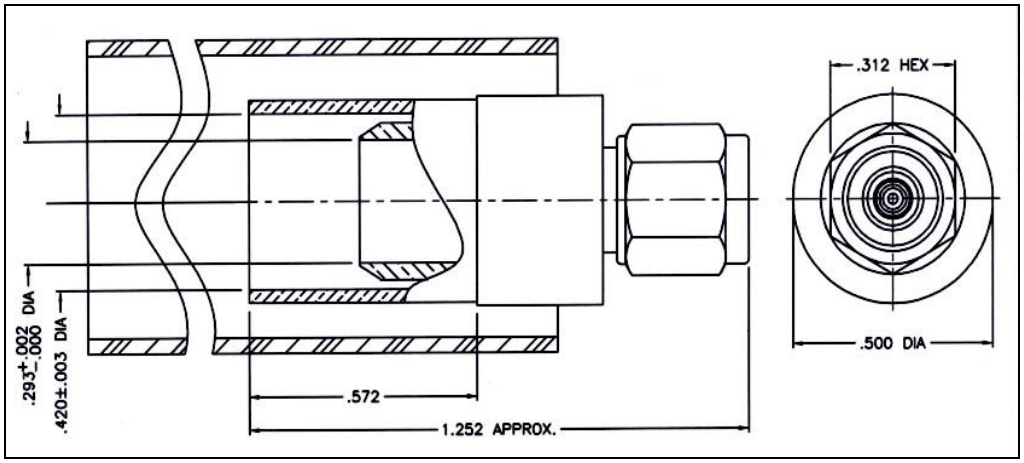

I. **MATERIALS & FINISHES**

center contact: Gold Plated Beryllium Copper
outer contact: Nickel Plated Brass
coupling nut: Stainless Steel
body: Nickel Plated Brass
crimp sleeve: Nickel Plated Copper
dielectric: Teflon® PTFE
gasket: Silicone Rubber
shrink sleeve: Adhesive Lined Polyolefin
attachment: braid crimp

II. **ELECTRICAL PROPERTIES**

impedance: 50 ohms
working voltage: 375 vrms (max)
vswr: 1.25:1 (max) up to 2.5 GHz
insertion loss: 0.10 x √Fghz

Unless otherwise specified, dimensions are in inches. Tolerances are applicable when specified.

These drawings and specifications contain proprietary information which is the property of Times Microwave Systems.

Approvals		
Drawn	JCL	1/22/97

TIMES MICROWAVE SYSTEMS
Wallingford, CT 06492
(203) 949-8400; (203) 949-8423.Fax
www.timesmicrowave.com

TC-400-SM
Type-SMA male (plug)
for LMR-400 Cable

Size	CAGE CODE	Drawing No.:
A	**68999**	**3190-439**

Scale: NA	Rev. (A)	Sheet: 1 of 1